4860 TRENCH

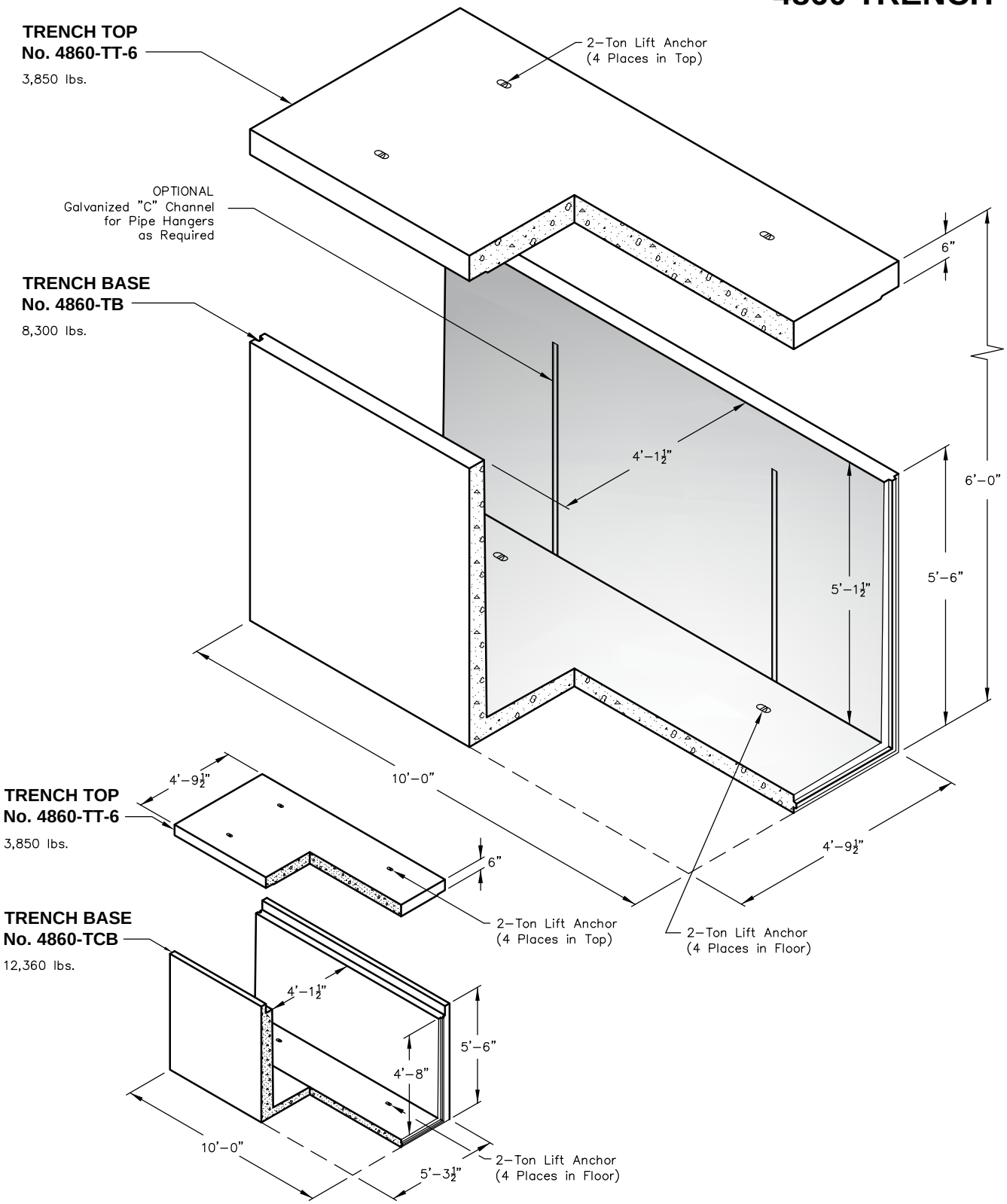

Note: Designed for 0 to 5'–0" of Cover

Oldcastle Precast® PO Box 323, Wilsonville, Oregon 97070-0323 Tel: (503) 682-2844 Fax: (503) 682-2657	**4860 TRENCH** File Name: 020-4860TR Issue Date: 2016 **oldcastleprecast.com/wilsonville**	**4860 TRENCH** **4 x 5**

4860 TRENCH

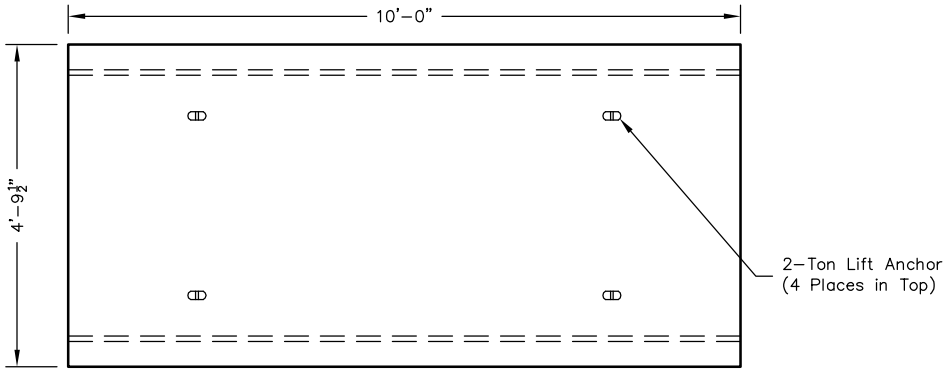

PLAN VIEW - TOP

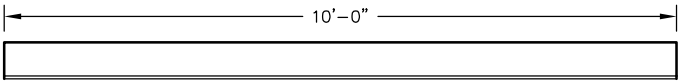

SIDE VIEW - TOP

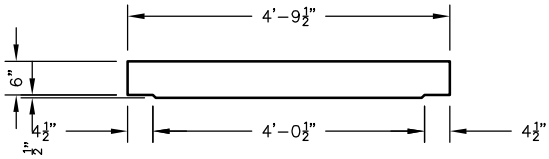

END VIEW - TOP

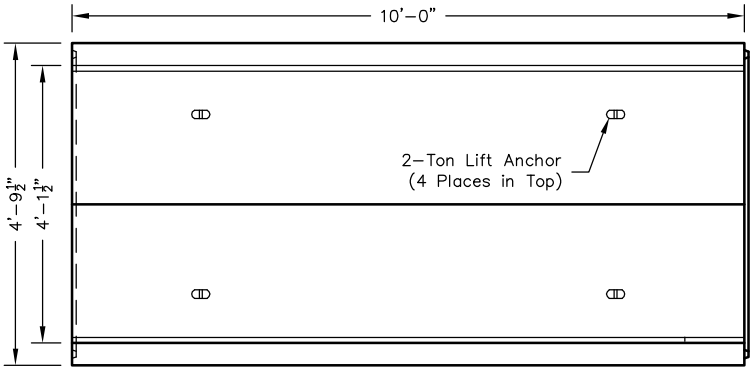

PLAN VIEW - BASE

SIDE VIEW - BASE

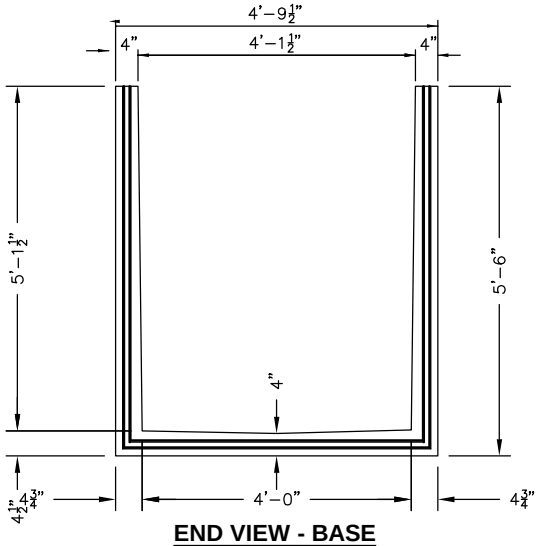

END VIEW - BASE

Notes:
– Customer to grout or caulk joints on vertical plane.
– Butyl resin sealant supplied for joints on horizontal plane.

Oldcastle Precast®
PO Box 323, Wilsonville, Oregon 97070-0323
Tel: (503) 682-2844 Fax: (503) 682-2657

4860 TRENCH

File Name: 020-4860TR
Issue Date: 2016
oldcastleprecast.com/wilsonville

4860 TRENCH
4 x 5