18"Ø C.I. Cover

Weight – 65 Lbs.
Item# – 7103100

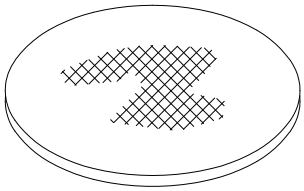

Roof Slab W/ Frame

Weight – 175 Lbs.
Item# – 1040400

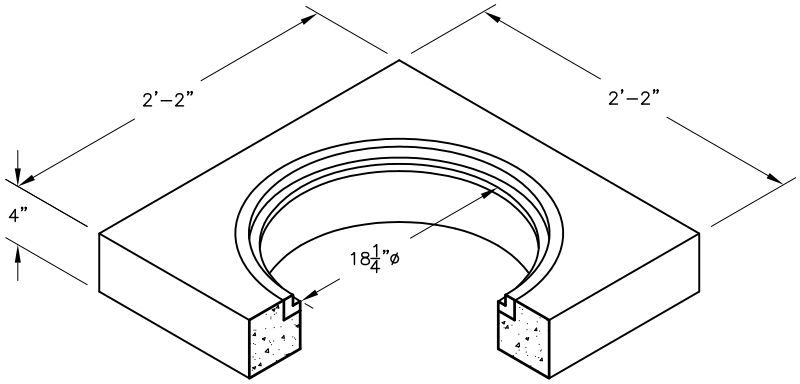

Body

Weight – 975 Lbs.
Item# – 1040220

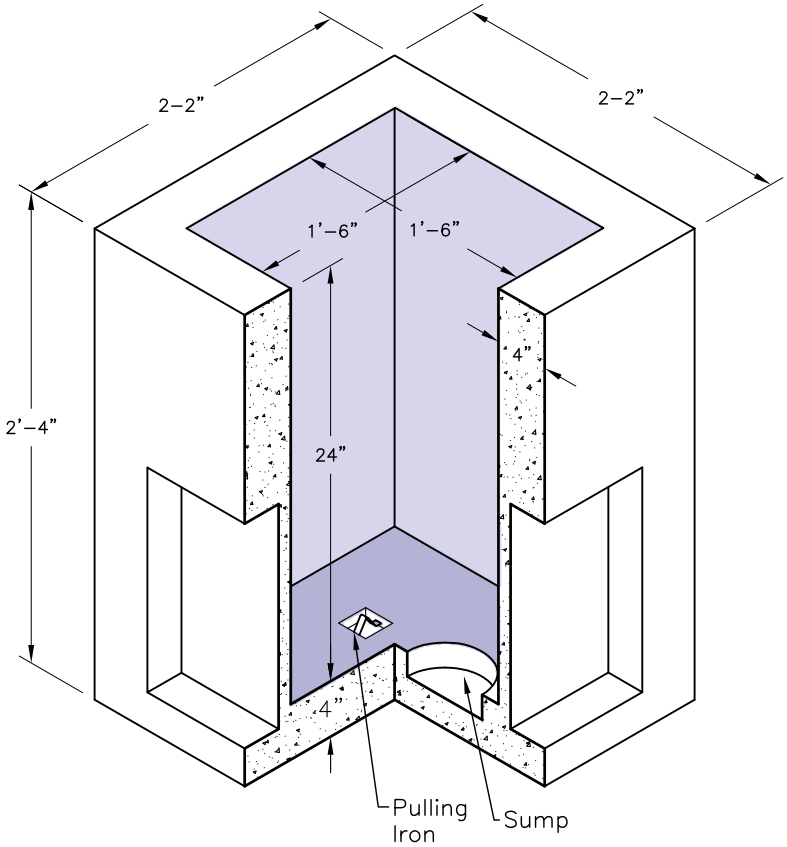

© 2013 Oldcastle Precast, Inc.